# KILLER BEES 33

# DESIGN BINDER

## BUZZ XVIII

## 2013

# INITIAL DESIGN PROCESS

After Kickoff, we began the design process by reviewing the rules with the new team. During this step, we looked over the field diagrams and specifications as well as considered the rules for the game. We continued development by determining primary functional objectives by analyzing cost and benefits of game tasks relative to point value.

Some of our primary functional objectives derived from these discussions for this robot included:

- picking Frisbees up from the floor
- being able to collect from the feeder station
- maneuvering under the pyramid and around the field quickly
- shooting at the 3 point goal quickly and accurately
- being able to hold 4 frisbees
- collect 2 Frisbees side by side
- robust and modular overall design
- climb quickly to levels 1-3
- shoot from feeder station
- processing and shooting upside down Frisbees
- weight management to allow manipulation of center of gravity/facilitate ballast

# DEVELOPMENT OF DESIGN

During week one, we were able to hold our brainstorming sessions in Chrysler's Innovation Space. With various projectors and whiteboards, students and mentors were able to suggest design concepts and relay them to the entire team. Once we determined our functional objectives for the machine, we began the CAD process in the same space, which accommodated the learning of younger students and collaboration throughout the design process. At the same time, mentors and students began the prototyping process in various sections, such as: shooter, shooter feeder/magazine, collector, hanging solutions, and chassis.

# CHASSIS DEVELOPMENT

The chassis is a key part of the design of the robot. We needed a chassis that is robust and maneuverable. A prototype chassis was designed and built during the offseason to test the wheels, gear ratios, and overall design concept. Fortunately, this prototype chassis provided key driver training. After Kickoff, we decided that a 6 wheeled version of this concept was feasible to accomplish our primary functional objectives.

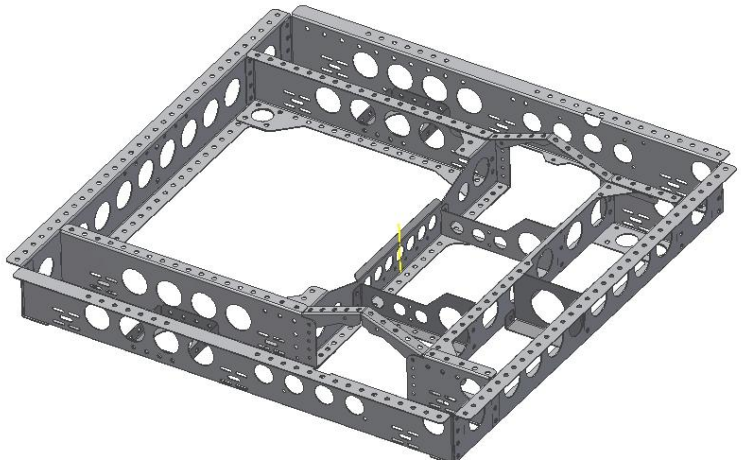

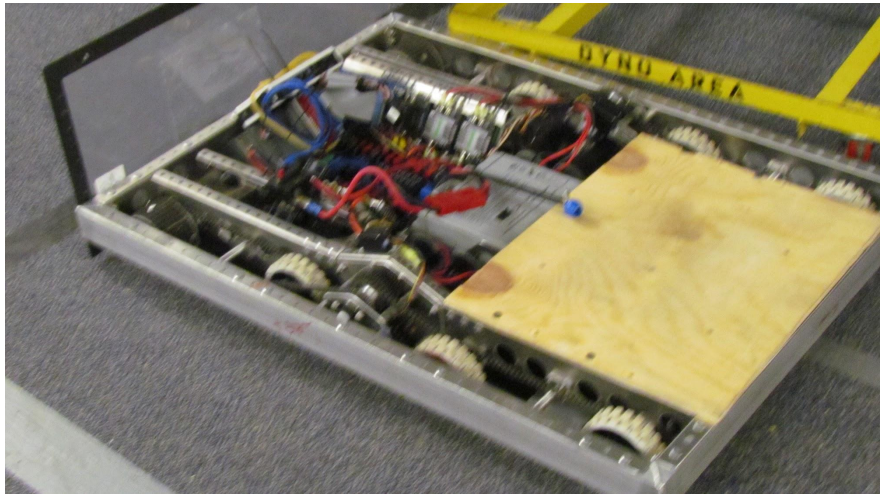

# CHASSIS SPECS

- 6-wheel drivetrain
- 4 CIMs geared to AM Standard gearboxes with pneumatic dog shifters, 12:40 first stage, 28:35 high/15:48 low, 22:32 final chain drive
- Chassis frame weighs 3lbs
- High gear: 13 f/s
- Low gear: 6.5 f/s

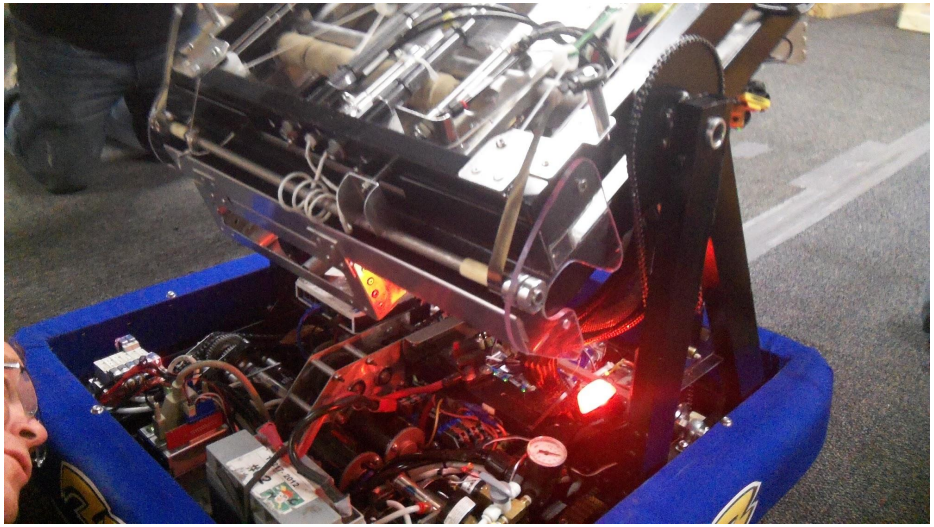

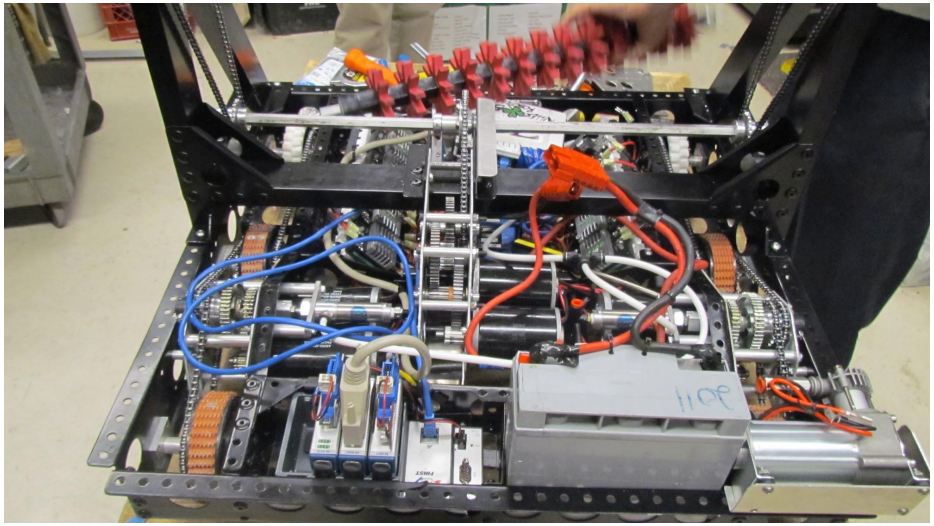

# COLLECTOR DEVELOPMENT

Since collecting frisbees from the ground was a key functional objective, we decided it was necessary that our collector be capable of picking discs up at as high an angle as possible to fit dimensional constraints. We tested collector angles at 35, 45, and 60 degrees and discovered that 45 degrees was the optimal angle. During the testing period, we determined that we would need a series of rollers to effectively collect the discs. Additionally, we found that a bottom roller with "ninja stars" was the best to flip the frisbees into the "slab", or internal conveyor system.

# COLLECTOR SPECS

- 14 "ninja" stars
- Two Banebots 550 motors
- Two bottom and a large top roller with rubber sleeves
- Actuated by two pneumatic pistons
- 45 degree angle to the ground
- 4" circular ground skids
- Modular system (both rollers and entire mechanism)

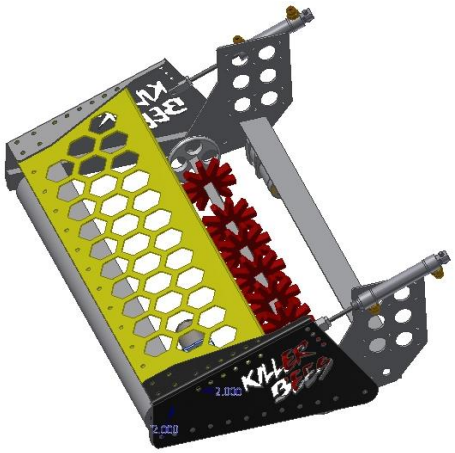

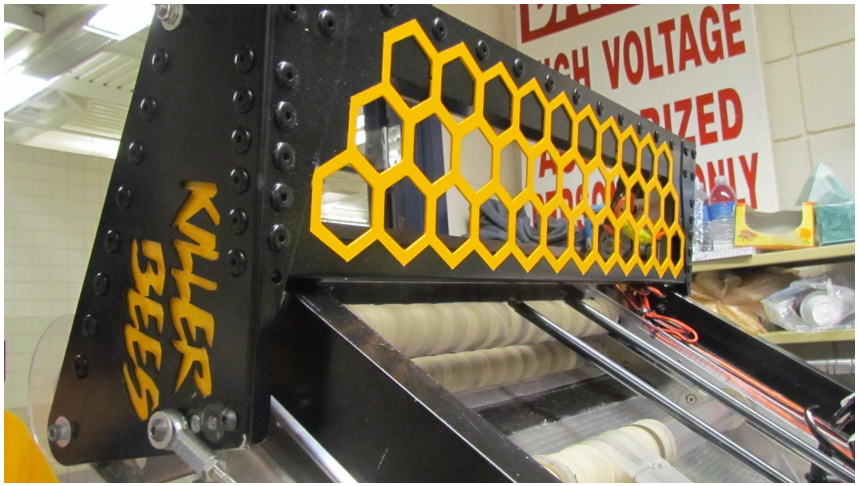

# SLAB & PIVOT DEVELOPMENT

Since we prioritized autonomous scoring in our functional objectives, picking up two discs side by side and quickly serializing them determined our design. We prototyped many different solutions to pushing the discs into one column but we discovered that a spring finger paired with placement of a rubber traction surface worked the most effectively.

Having a pivoting slab on our robot allows the operator to easily change our shooter's angle of elevation, collect from both the ground and human player, and climb the pyramid.

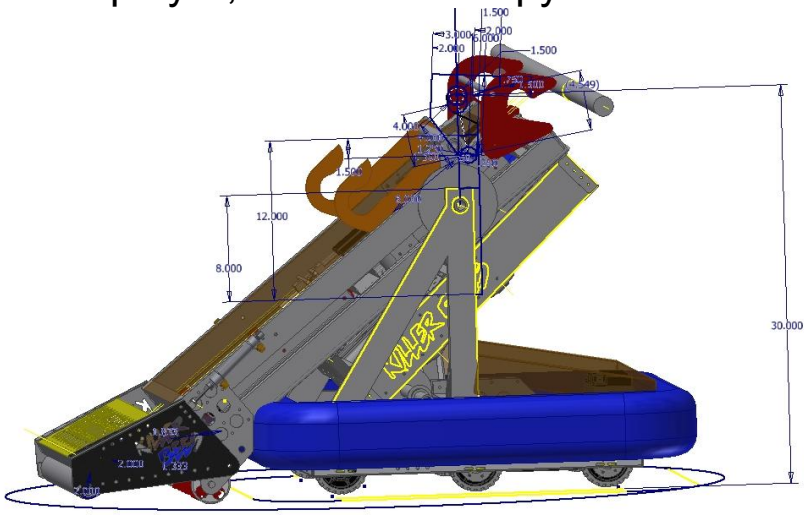


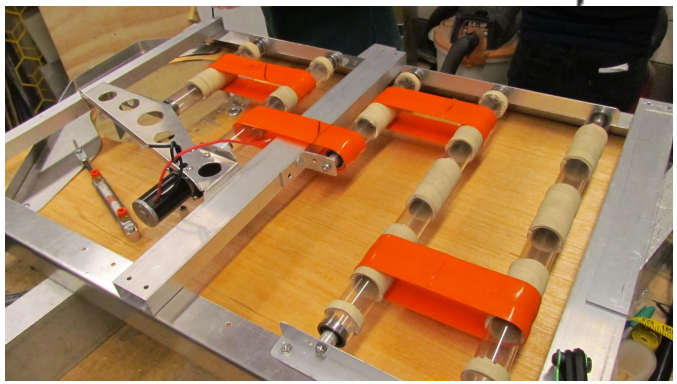

In addition, we also created many iterations of the shooter in-feed, which is mounted to the slab. Initially, we used a piston to push the discs into the shooter but discovered that 2 or more frisbees could get loaded into the gun and jam. To fix the issue, we created an actuating dual-gate system that proved to be an inefficient and ineffective solution when paired with the complex electronic state machine needed to manage it. In our current iteration, we are using a cylindrical collecting station and pneumatic in-feed which allows us to shoot rapidly and avoid jamming. Adding the cylinder also allows us to fit three discs on the slab and have one loaded in the

# SLAB & PIVOT SPECS

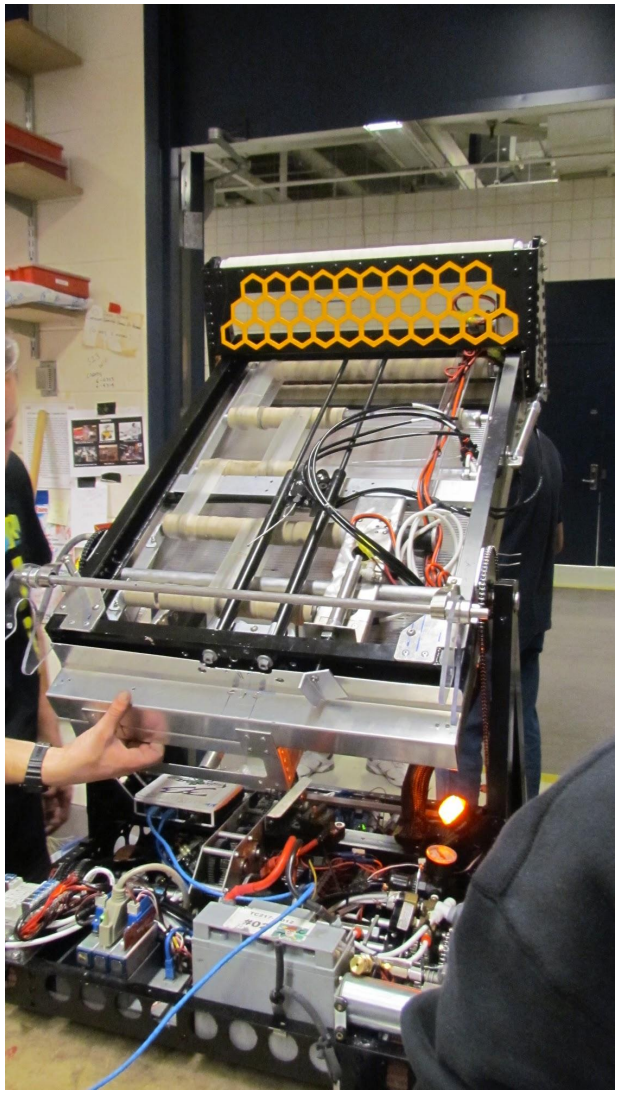

Slab:

- 5 Rollers with belts
- Mini CIM with a VEX Versaplanetary gearbox, 10:1 ratio
- Two pistons on shooter in-feed

Pivot:

- Speed: 90 degrees/sec
- 2 Mini CIMs geared to a 400:1 ratio

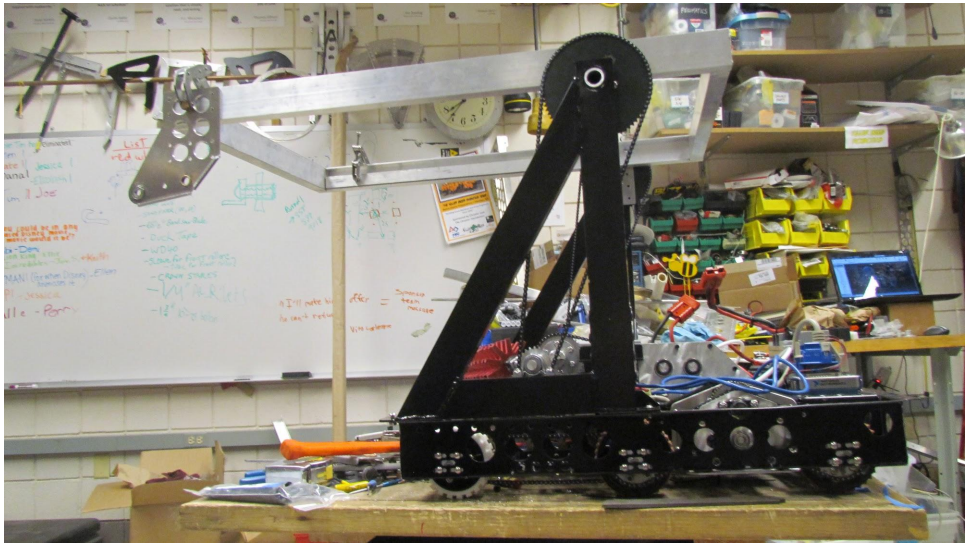

# SHOOTER DEVELOPMENT

To develop our shooter, we began prototyping with various types of wheels, reaction surfaces, wheel speeds, horizontal compression, vertical pinch, and structural materials. Our first prototypes gave us huge success, and we translated important variables into an all-metal shooter. We determined that a high friction traction surface opposing the wheels, 6" pneumatic wheels driven by 2 CIMs, rails for vertical constraint, and 10 3/8" horizontal pinch were optimal variables for the production machine.

# Shooter Specs

- Two CIM motors driven on 2.2:1 and 1.8:1 gear ratios by timer belts
- Two 6" pneumatic wheels
- Custom-machined and balanced wheels and hubs
- 10 3/8" compression on discs
- Tire rubber traction surface
- Modular system
- 1.6" vertical pinch
- Front wheel ~ 8000 rpm
- Back wheel ~ 6500 rpm

# HANGING DEVELOPMENT

One of the key design features of the robot includes the rotating slab, which allows us to manipulate the center of gravity. However, many climbing prototypes were limited by the completion of the robot to find the true center of gravity. In a review of our functional objectives and cost-benefit analysis, we decided to pursue 10-20 point hangs.

Robot will lift from floor after about 55-60 degrees of slab articulation
Assumes Slab assembly is 40lbs, Chassis is 110lbs total.
Assumes Slab CG is centered. Assumes Chassis CG at 2/3 rear bias.

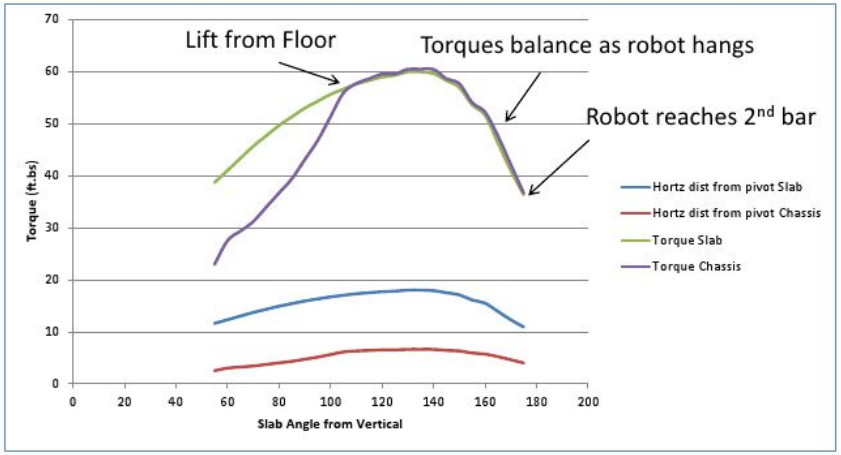


Peak Torque approx. 60 ft.lbs

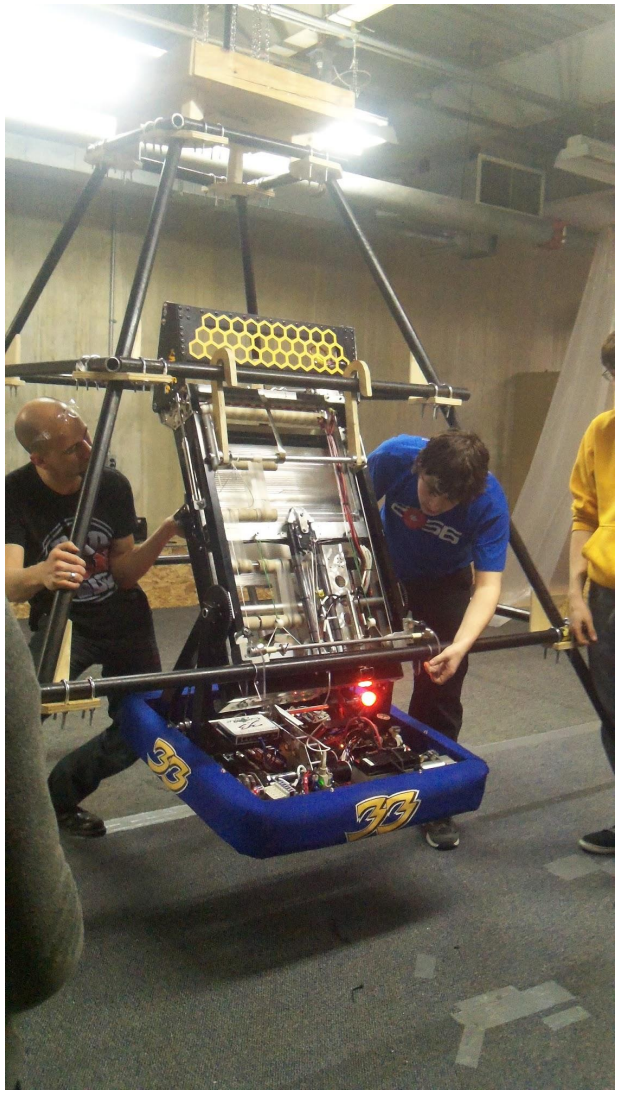

# HANGING SPECS

- .25" aluminum hooks
- Freely pivoting arm, locked in by a piston
- String ratio determines placement of mechanism
- Can 10 point hang at same speed as arm
- Easily hang by deploying hooks and backing into pyramid
- Cannot accidentally deploy hooks and get stuck to tower

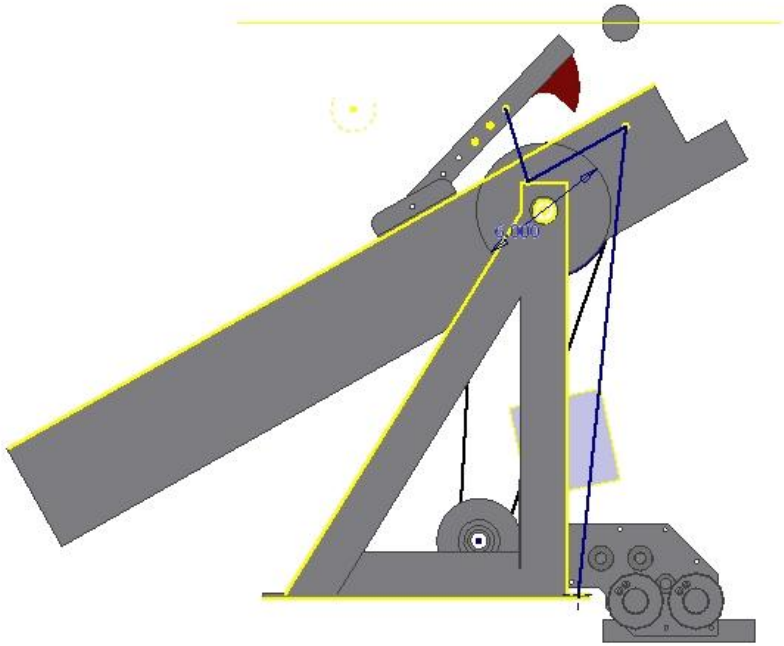

# ELECTRONICS AND PNEUMATICS

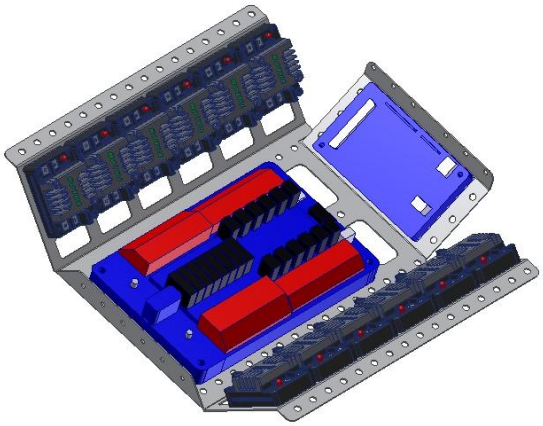

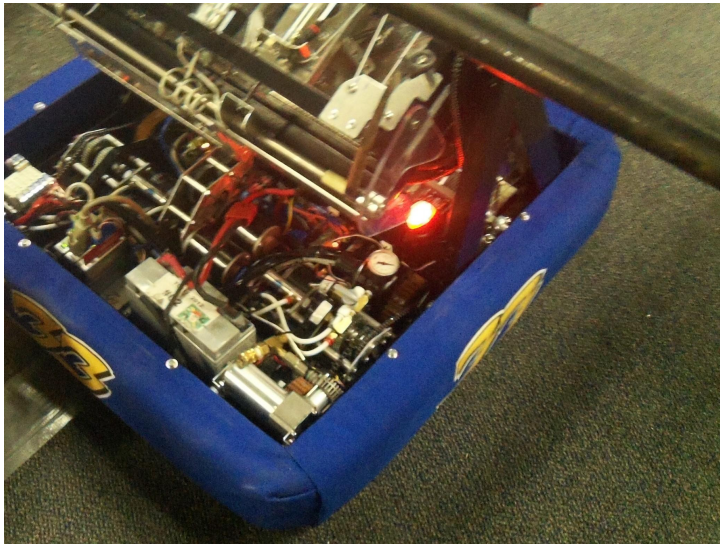

Electronics:

- 12 Talons
- 10g-4g wire
- Electronics board was rendered in CAD before assembly.

This year the use of pneumatics was essential to our design. Without pneumatics, we would not be able to rapidly actuate many of our major subsystems, such as our collector, shooter in-feed, and drivetrain shifting.

- 7 pistons
  - two -collector
  - two- shooter in-feed
  - two- drivetrain

# Programming and Logic

This year, we are implementing a new drive system called "Culver Drive." As opposed to using the x axis of the wheel stick in Halo Drive, Culver drive uses (θ of wheel stick * r) to get primary outputs. This way, the driver has throttle on the left joystick as usual, but uses the right joystick like a steering wheel. Culver Drive also includes a Quick Turn option for tighter turning and fine adjustments.