KILLER BEES 33

2013 BEHIND THE DESIGN: BUZZ XVIII

Waterford District Champions
Innovation in Controls Award
Grand Blanc District Champion
Quality Award
Bedford District Champions
Industrial Design Award
Michigan State Championship Semifinalists
Archimedes Division Champions
World Finalists
Quality Award
Season Record: 74-17-1

INITIAL DESIGN PROCESS

After Kickoff, we began the design process by reviewing the rules with the new team. During this step, we looked over the field diagrams and specifications as well as considered the rules for the game. We continued development by determining primary functional objectives by analyzing cost and benefits of game tasks relative to point value.

Some of our primary functional objectives derived from these discussions for this robot included:

- picking Frisbees up from the floor
- being able to collect from the feeder station
- maneuvering under the pyramid and around the field quickly
- shooting at the 3 point goal quickly and accurately
- being able to hold 4 frisbees
- collect 2 Frisbees side by side
- robust and modular overall design
- climb quickly to levels 1-3
- shoot from feeder station
- processing and shooting upside down Frisbees
- weight management to allow manipulation of center of gravity/facilitate ballast

KILLER BEES 33

CHASSIS

The chassis is a key part of the design of the robot. We needed a chassis that is robust and maneuverable. A prototype chassis was designed and built during the offseason to test the wheels, gear ratios, and overall design concept. This prototype chassis also provided vital driver training. After Kickoff, we decided that a 6 wheeled version of this concept was feasible to accomplish our primary functional objectives.

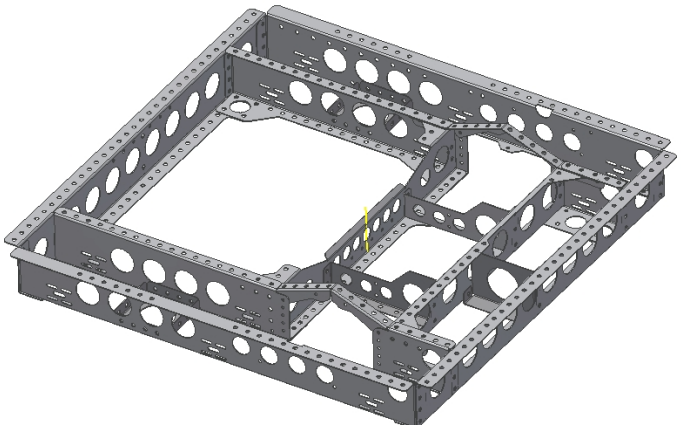

Specs:

- **6-wheel drivetrain**
- **4 CIMs geared to AM Standard gearboxes with pneumatic dog shifters, 12:40 first stage, 28:35 high/15:48 low, 22:32 final chain drive**
- **Chassis frame weighs 3lbs**
- **High gear: 13 f/s**
- **Low gear: 6.5 f/s**
- **Front two wheels: AndyMark HiGrip 4” wheel**
- **Back four wheels: 4” VEXPro VersaWheels**

COLLECTOR

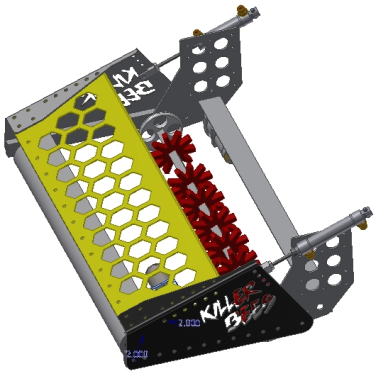

Since collecting frisbees from the ground was also functional objective, we decided it was necessary that our collector be capable of picking discs up at as high an angle as possible to fit dimensional constraints. We tested collector angles at 35, 45, and 60 degrees and discovered that 45 degrees was the optimal angle. During the testing period, we determined that we would need a series of counter rotating rollers to effectively collect the discs. Additionally, we found that a bottom roller with "ninja stars" was the best to flip the frisbees into the "slab", or internal conveyor system. The larger diameter floating top roller engages the top half of the disc, while the entrapption stars engage the bottom lip of the disc, effectively feeding it into the counter rotating pinch rollers at the mouth of the “slab”.

KILLER BEES 33

Specs:

- **14 "ninja" stars (AndyMark Entrapption Star, 4.75 inch Diameter)**
- **Two Banebots 550 motors (chained/belted to star roller and floating roller)**
- **Two inner pinch rollers and a large, floating top roller with rubber sleeves**
- **Actuated by two 4” pneumatic pistons**
- **45 degree angle to the ground**
- **Plastic ground skids to maintain constant contact with the ground**
- **Modular system (both rollers and entire mechanism)**
- **Can collect 2 discs at a time**
- **Can collect while driving backwards**

SLAB & PIVOT

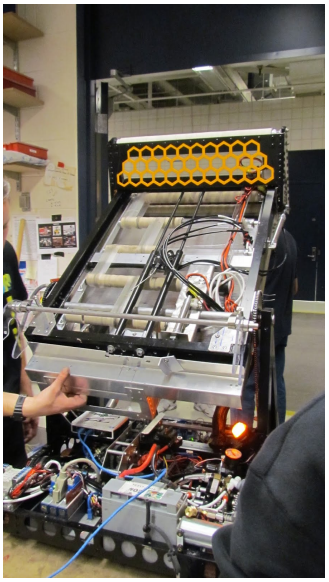

Since we prioritized autonomous scoring in our functional objectives, picking up two discs side by side and quickly serializing them determined our design. We prototyped many different solutions to pushing the discs into one column but we discovered that a spring finger paired with placement of a rubber traction surface worked the most effectively. Having a pivoting slab on our robot allows the operator to easily change our shooter's angle of elevation, collect from both the ground and human player, and climb the pyramid.

In addition, we also created many iterations of the shooter in-feed, which is mounted to the slab. Initially, we used a piston to push the discs into the shooter but discovered that 2 or more frisbees could get loaded into the gun and jam. To fix the issue, we created an actuating dual-gate system that proved to be an inefficient and ineffective solution when paired with the complex electronic state machine needed to manage it. In our current iteration, we are using a cylindrical collecting station and pneumatic in-feed which allows us to shoot rapidly and avoid jamming. Adding the cylinder also allows us to fit four discs in a stack, allowing for rapid shooting.

Specs:

- **Slab**
  - **5 plastic rollers with rubber sleeving**
  - **Flat urethane belts to drive rollers**
  - **Mini CIM with a VEX Versaplanetary gearbox, 10:1 ratio**
  - **Two 4” pistons on shooter in-feed**
  - **Corrugated polycarbonate floor**
- **Pivot**
  - **2 Mini CIMs geared to a 400:1 ratio**
  - **Speed: 90 degrees/sec**

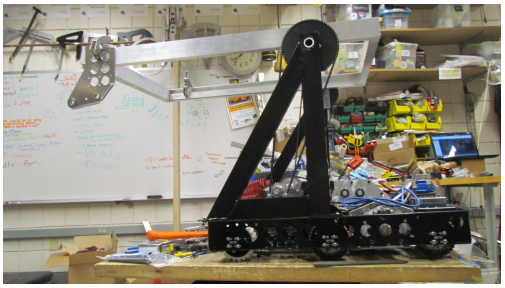

KILLER BEES 33

SHOOTER

To develop our shooter, we began prototyping with various types of wheels, reaction surfaces, wheel speeds, horizontal compression, vertical pinch, and structural materials. Based off of initial superstructure concepts, we knew that we needed a linear shooter in order for it to package properly with the rest of the robot. Our first prototypes were successful, and we translated important variables into an all-metal shooter. We determined that a high friction traction surface opposing the wheels, 6" pneumatic wheels driven by 2 CIMs, rails for vertical constraint, and 10 3/8" horizontal pinch were optimal variables for the production machine. During the offseason, we redesigned our wheel and motor box for the IRI competition by using lighter wheels, more efficient motors, and adding a third wheel.

Regular season shooter specs:

- **Two CIM motors driven on 2.2:1 and 1.8:1 gear ratios by timer belts**
- **Two 6" square pneumatic wheels**
- **10 3/8" compression on discs**
- **Custom-machined and balanced wheels and hubs**
- **Tire rubber reaction surface**
- **Modular system**
- **1.6" vertical constraint**
- **Front wheel ~ 8000 rpm**
- **Back wheel ~ 6500 rpm**

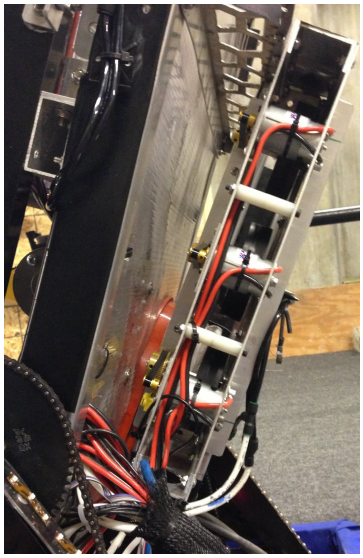

Offseason shooter specs:

- **3 AndyMark 9015 motors driving (need ratios)**
- **3 McMaster 4” large bore drive rollers (need durometer and material)**
- **Tire rubber reaction surface**
- **~1/4-1/2” horizontal pinch**
- **(need approximate wheel speeds)**

KILLER BEES 33

HANGING DEVELOPMENT

One of the key design features of the robot includes the rotating slab, which allows us to manipulate the center of gravity. However, many climbing prototypes were limited by the completion of the robot to find the true center of gravity. In a review of our functional objectives and cost-benefit analysis, we decided to pursue 10-20 point hangs. Unfortunately, time and weight constraints led us to pursue a simpler method and only climb for 10 points.

Robot will lift from floor after about 55-60 degrees of slab articulation
Assumes Slab assembly is 40lbs, Chassis is 110lbs total.
Assumes Slab CG is centered. Assumes Chassis CG at 2/3 rear bias.

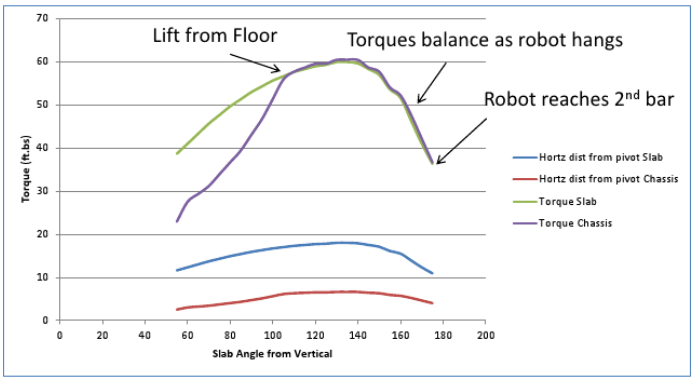

Peak Torque approx. 60 ft.lbs

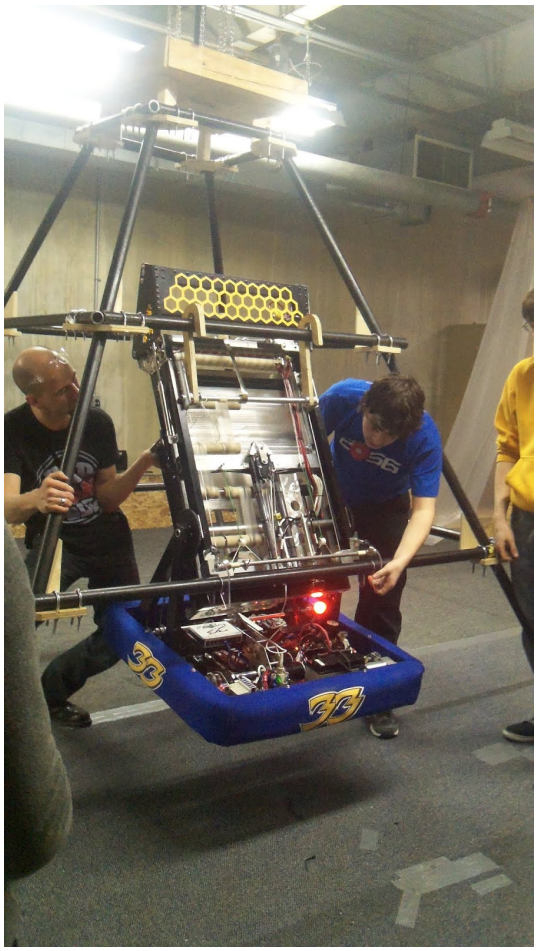

Specs:
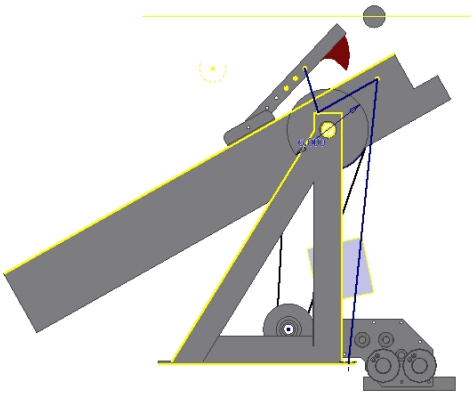
- **.25" aluminum hooks**
- **Freely pivoting arm, locked in by a piston**
- **String ratio determines placement of mechanism**
- **Can 10 point hang at same speed as arm**
- **Easily hang by deploying hooks and backing into pyramid**
- **Cannot accidentally deploy hooks and get stuck to tower**